BMR-315-2-A-D-B

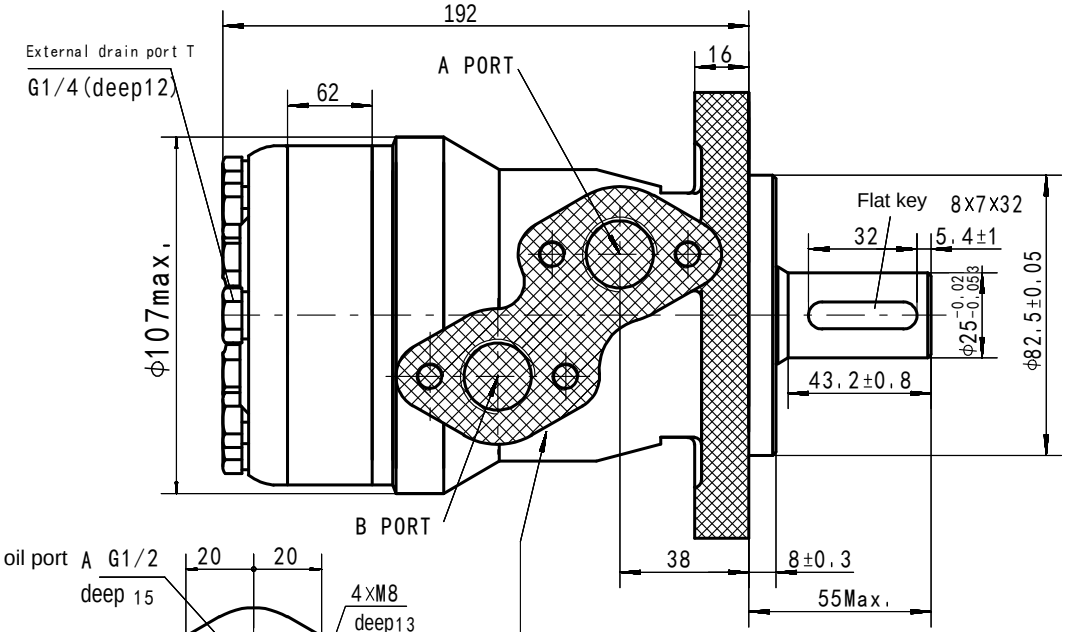

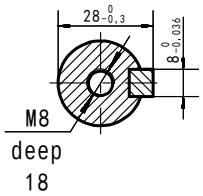

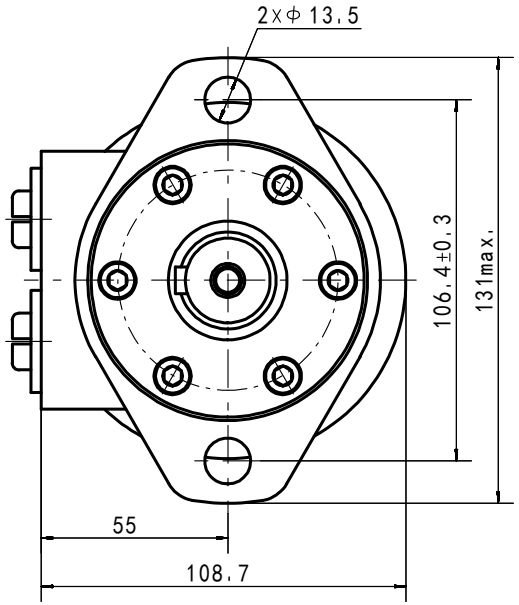

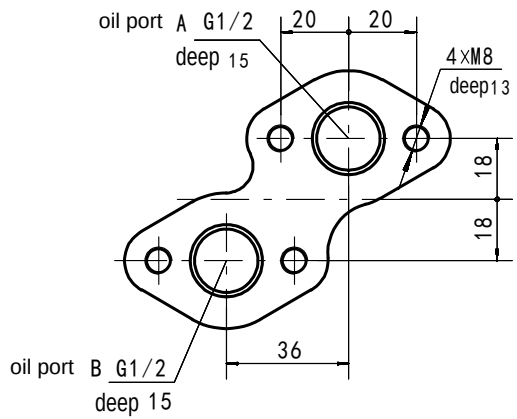

MAIN SPECIFICATION

Type BMR-315-2-A-D-B

Geometric displacement(cc/rev)317.5

Max speed (rpm): cont. 190
int. 240

Max torque (Nm): cont. 390
int. 535
peak 650

Max output (kw): cont. 6.0
int. 9.0

Max pressure drop (MPa) cont. 9
int. 13
peak 17.5

Max flow(L/min): cont. 60
int. 75

BMR 315 [317.5cm³/rev.]

Flow (L/min)	Pressure (MPa) 5	7	9	10	12	14 (Max.cont.)	16	17.5 (Max.int.)
5	215 **13**	302 **11**						
10	218 **28**	305 **27**	383 **25**	422 **24**	488 **21**	551 **18**	622 **13**	
20	215 **60**	303 **59**	380 **57**	418 **55**	485 **52**	549 **49**	620 **45**	660 **42**
30	204 **91**	296 **89**	375 **86**	413 **84**	480 **81**	542 **78**	613 **72**	654 **67**
40	196 **122**	287 **120**	368 **117**	410 **112**	477 **106**	539 **100**	609 **94**	650 **85**
50	176 **154**	270 **151**	356 **147**	393 **140**	461 **131**	526 **120**	597 **109**	645 **100**
60 (Max.cont.)	162 **185**	246 **182**	339 **177**	374 **172**	446 **163**	511 **152**	586 **140**	628 **134**
70	143 **217**	235 **213**	324 **208**	358 **201**	430 **190**	493 **178**	562 **166**	614 **158**
75 (Max.int.)	125 **232**	212 **228**	303 **222**	339 **216**	417 **208**	481 **200**	543 **183**	582 **171**

Torque (N•m) 481
Speed (rpm) **200**

cont.
int.

Rotation direction of output shaft: Standard
When facing the direction of the motor shaft extension, when the oil port A is high pressure oil, the output shaft rotates clockwise; otherwise, it rotates counterclockwise.
B:Black

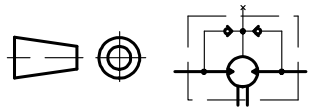

HGB S.R.L
BMR Assembly drawing
BMR-315-2-A-D-B